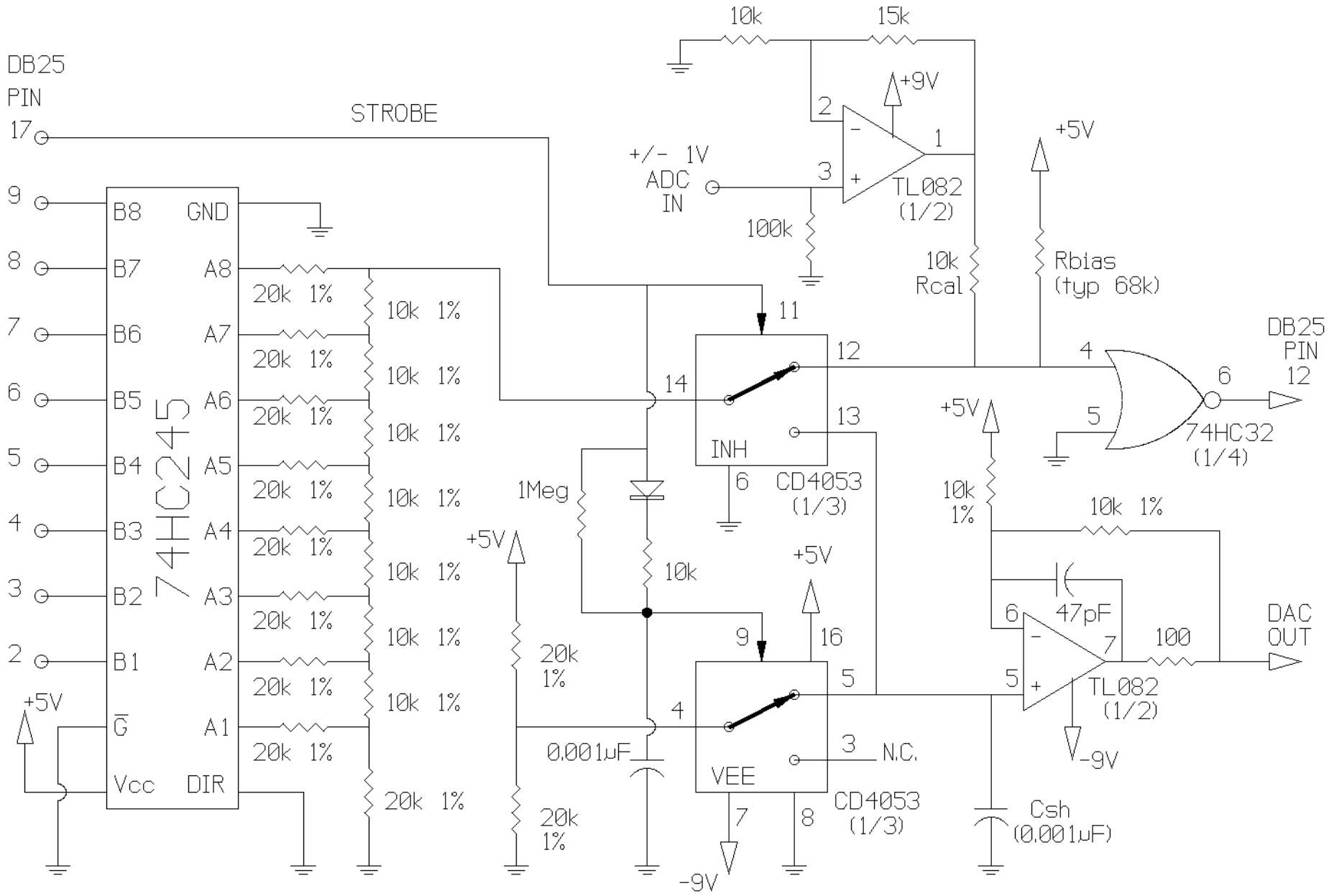

DAQARTA LPTX MUX BOARD

R. I. MASTA 1-11-98

Document created by the PCL2PDF (TM) evaluation
(C) Copyright 1996-2005 G-Futures Limited t/as Visual Software
Visual Software http://www.visual.co.uk